4425O

Description

Device functions: It strengthens back deltoid of shoulders muscles.

Model type	Solitair
Serial number	4425O
Equipment name	Inverse Butterfly

Join the action!

Inverse Butterfly

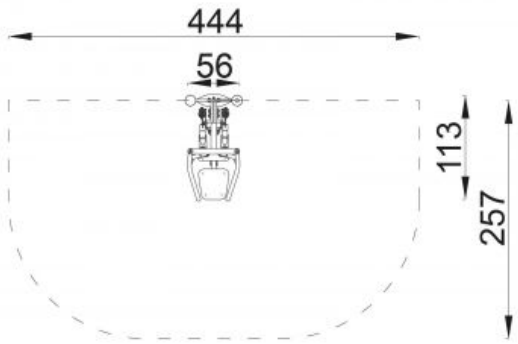
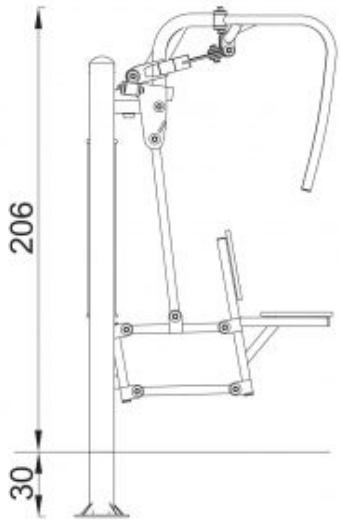
Product line	Action Outdoor Fitness Solitair
Age range	14 - 99
Unit measurements	115cm x 56cm x 202cm
Required surface area	444cm x 416cm
Impact area	17m²
Free height of fall	0cm
Material	Powder coated zinc layer steel. Pole is made of a steel tubes diameter 114 mm. Holders and other tube elements are made of steel tube diameter 40 mm, 3,2 mm thickness. Seats: weather resistant HDPE. Pedals: stainless steel.
Heaviest part	kg
Largest part	cm - cm
Spare parts	None
Installation time without grondwork	4 hour(s) / 2 person(s)
Special tools	None
Anchoring	Equipment will be installed 30 cm under ground level on a concrete foundation. Extra concrete is needed for more stability
Remarks