3019EPZ

Description

An indispensable element of every playground. Thanks to careful execution, it is the favorite companion of every child's play. Spring ride is an unforgettable adventure, which also develops coordination and balance. It provides children with unique entertainment in a friendly environment and creates the opportunity to use child energy positively.

Model type	Solitair
Serial number	3019EPZ
Equipment name	Motorbike 3019

Join the action!

Motorbike 3019

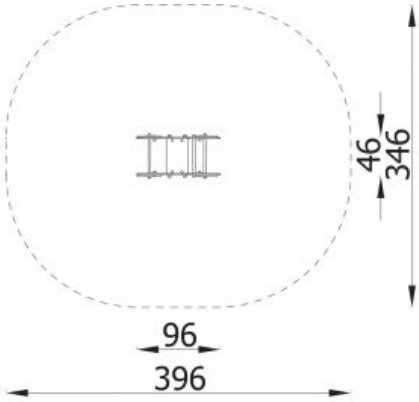

Product line	Action Spring Riders Solitair
Age range	3 - 12
Unit measurements	96cm x 46cm x 77cm
Required surface area	396cm x 346cm
Impact area	10m²
Free height of fall	35cm
Material	Concrete Base, Fastening materials (bolts etc.): Stainless steel, Steel parts: Zinc primer and powder coated, Panels: UV-resistant High Density Polyethylene (HDPE) Material thickness: 19mm
Heaviest part	kg
Largest part	cm - cm
Spare parts	None
Installation time without grondwork	1 hour(s) / 1 person(s)
Special tools	None
Anchoring	Posts are directly 45 cm longer and will be installed 45 cm under ground level.
Remarks	

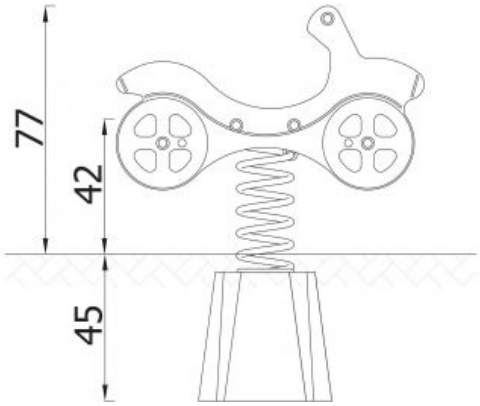

Boleslawa Chrobrego 1 - 12-100 - Szczytno - T: +48 89 621 21 12 - E: export@novumgrom.com